i-KI Commissioning with Nadi Controller

This document must be read in association with the i-KI installation manual provided with the unit. The purpose of this document is to assist with the commissioning of the heat pump. It is essential the manual is read and followed to ensure the installation is per manufacturers criteria.

There are various systems/set ups the Heat Pump can be installed to. This document will covers the most common options:

Pre-Commissioning	Page 1
B. Underfloor with Aube Thermostat	Page 6
C. Underfloor with Aube Thermostat and DHW	Page 8
D. Underfloor with Buffer Tank, Aube Thermostat and DHW	Page 12
E. Underfloor with Nadi Controller	Page 14
Final Notes – Complete commissioning, checking Temperatures, Troubleshooting	Page 16

1. Prior to Commissioning

A) Ensure the heat pump is installed in accordance with the installation manual.
B) Ensure the power is isolated to the unit
C) Remove the side cover of the unit to expose the water pump, compressor and electrical enclosure.
D) Check that the water pump on the unit is free to turn and not seized. In addition please check any internal pumps.
E) Fill the system with water and ensure all air is removed.

2. Fill the system with water

The system can now be filled with water to around 1 bar pressure.

The iKi heat pumps have a pump run switch on the small PCB under the front cover of the heat pump on the smaller heat pumps, and under a panel on the side of the larger models. This allows the circulation pump to be run manually to help vent the system.

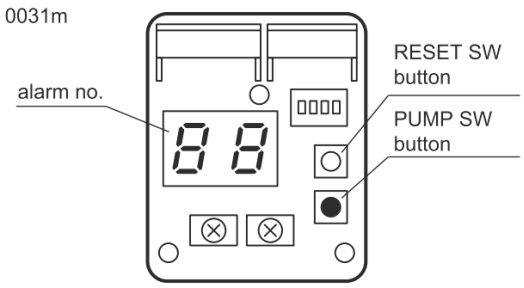

Leave the unit on standby for 2 hours once filled.

Before the heat pump runs for the first time it is necessary to let it stand for 2 hours with the power on. This is to allow the heating band around the compressor to heat the compressor to drive off any liquid refrigerant in the compressor. This is

necessary as the compressor is only designed to compress gas and if any liquid refrigerant is in the compressor when it starts it could be damaged.

In the interim steps 3 and 4, setting the clock, can be completed.

3. What happens when you turn on the main isolator

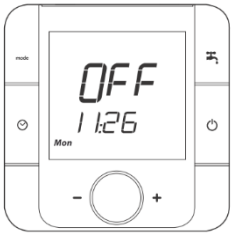

The Nadi controller room unit will go through an initialisation phase that can last a few minutes and will show ***Cn*** followed by ***init*** before showing ***Off*** with the time.

Do not put it into DHW or heating mode for 2 hours. During this time you can set the clock and change any necessary parameters.

4. Set the clock

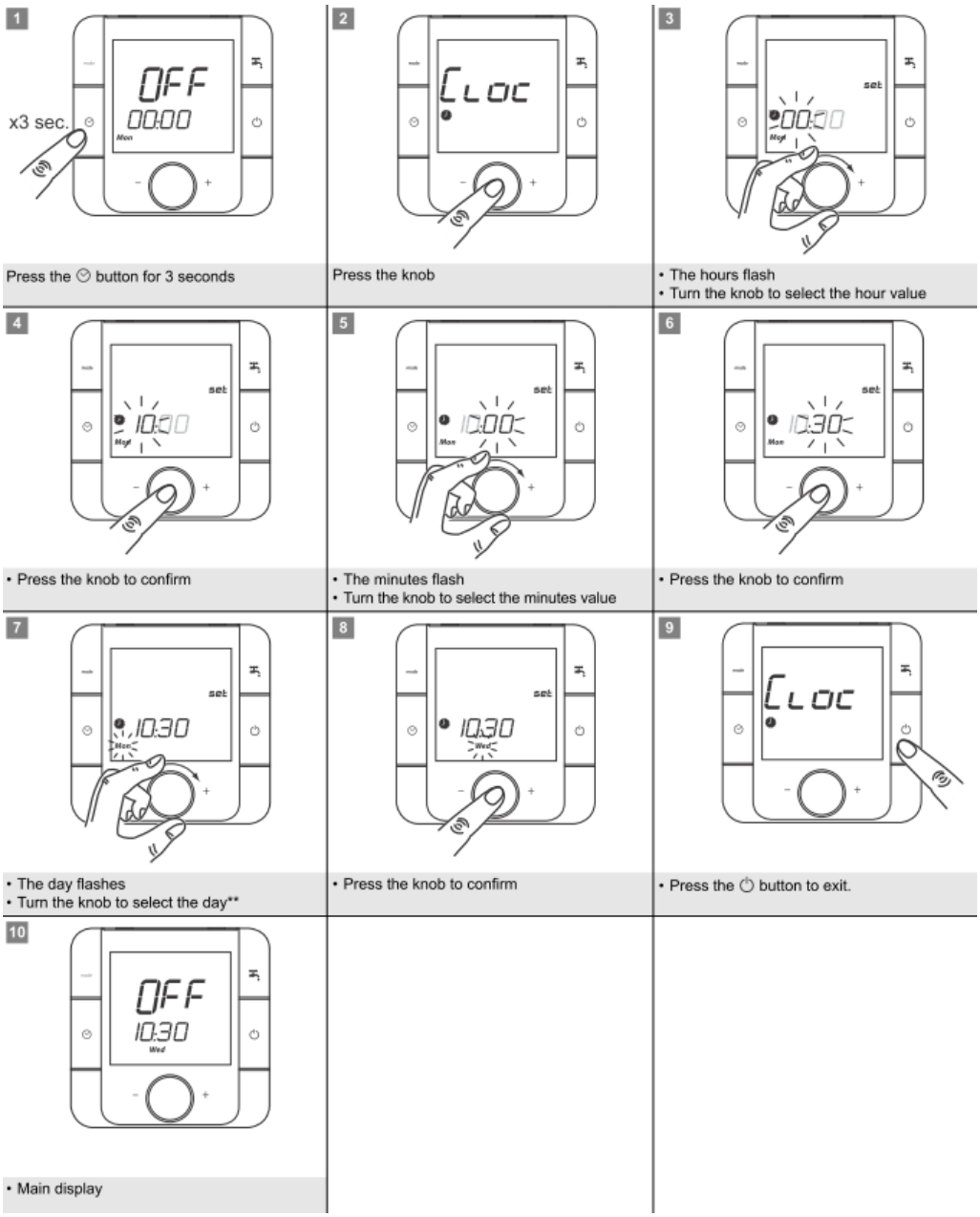

5. Switching on the controller ON (controller only. This does no switch the heat pump on)

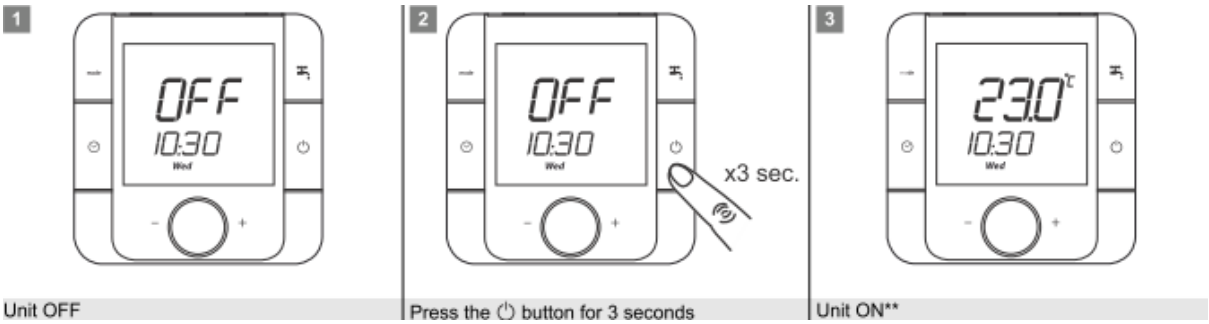

6. Accessing the Menu/Parameters within the Nadi Controller.

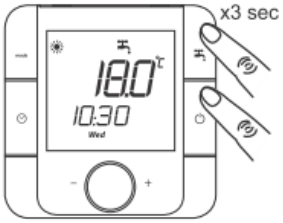

To access the menu within the Nadi Controller press and hold the and for 3 secs.

(if the sun symbol on the top left hand corner appears, press the mode button to turn it off – we do wish for the heat pump to run yet)

Turn the knob and select the required

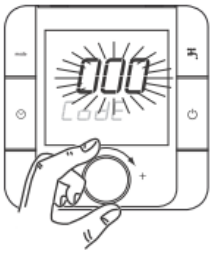

code

Once the code, in this case 012, is displayed on the screen, press the knob to confirm.

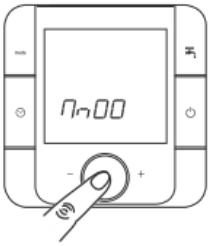

The screen now displays MnOO i.e. Menu OO

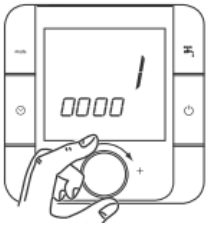

Turn the knob until you reach the required parameter. Once you see the required parameter on the screen press the knob to confirm.

Turn the knob to adjust the setting.

Press the knob to confirm the adjusted setting.

7. Menu Settings

The table below shows the various menus for accessing parameters and the associated passwords to gain access to the relevant locations.

Level	Password	Menu description	Menu code
User	012	Room unit	Mnu00
Installer	022	Zone room terminal address setting	Addr
	034	System configuration	Mnu01
		DHW	Mnu02
		Supplem. sources	Mnu03
		Cascade/Forced fan	Mnu04
		Primary and DHW exchanger	Mnu06
		input / output	Mnu09

Heat Pump Control Options.

A. Underfloor with Aube Thermostat

The schematic below illustrates the set up for the commissioning steps that follow.

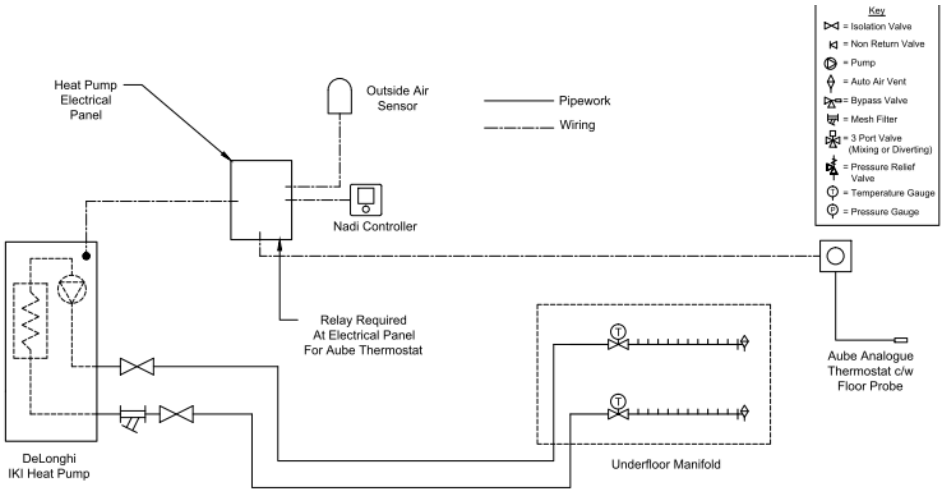

A1. Check all wiring connections

- Ensure BT8 (DHW Sensor) and BT9 (Buffer Tank Sensor) remain connected and left placed inside the wiring module.
- Check BT1 and BT2 probes are in the correct pockets.
- Heating is controlled with the Aube Thermostat. It must be connected to SA1, via a relay. The schematic on the next page shows an Omron Relay and the relevant connections. Should an alternative relay be used please ensure you check the required connections and wire as necessary.
- It is recommended that a flow switch is installed. Should you not install a flow switch then it is necessary to install a bridge between terminals 39 and 40.

i-KI Internal Module Final Wiring layout – Underfloor Layout with Aube Thermostat

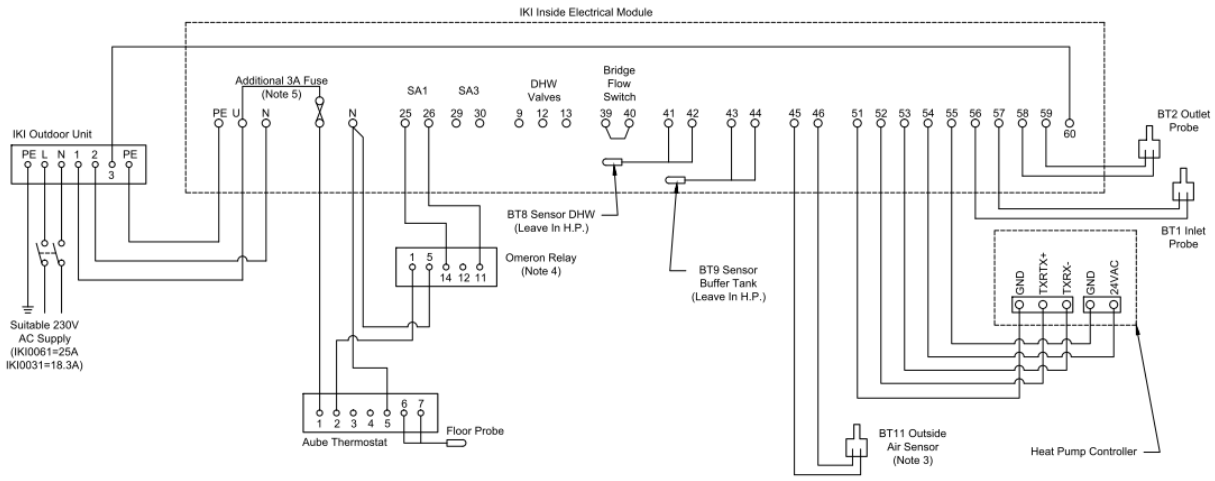

A2. Parameter Settings

Aube Thermostat Control - Ensure the Nadi controller is disabled as a room stat and the Aube Thermostat is activated.

Parameter 11D is factory set to 1. Check to ensure this parameter is set to 1.

Menu 1, and turn the knob anti-clockwise until 11D displays on the screen. If set to 0, change to 1.

A3. Heating Set Point/Weather Compensation.

Determine if the heating will operate from fixed return set point or outside weather compensation.

Return Set Point

- Menu 1, parameter 0152 (weather compensation) – ensure this is set at 0. (0=disabled)
- Menu 1, parameter 0153 (fixed return water temperature) – adjust the set point as required (typically 45 for underfloor heating).

Menu	Parameter no.	Default
Mn01	0152	0

This parameter is defaulted to 55. The setting needs to be set in accordance with the floor covering.

Weather Compensation (if required)

- Menu 1, parameter 0152 – change to 1.
- Menu 1, parameter 0159 – set the compensation curve from the graph below.

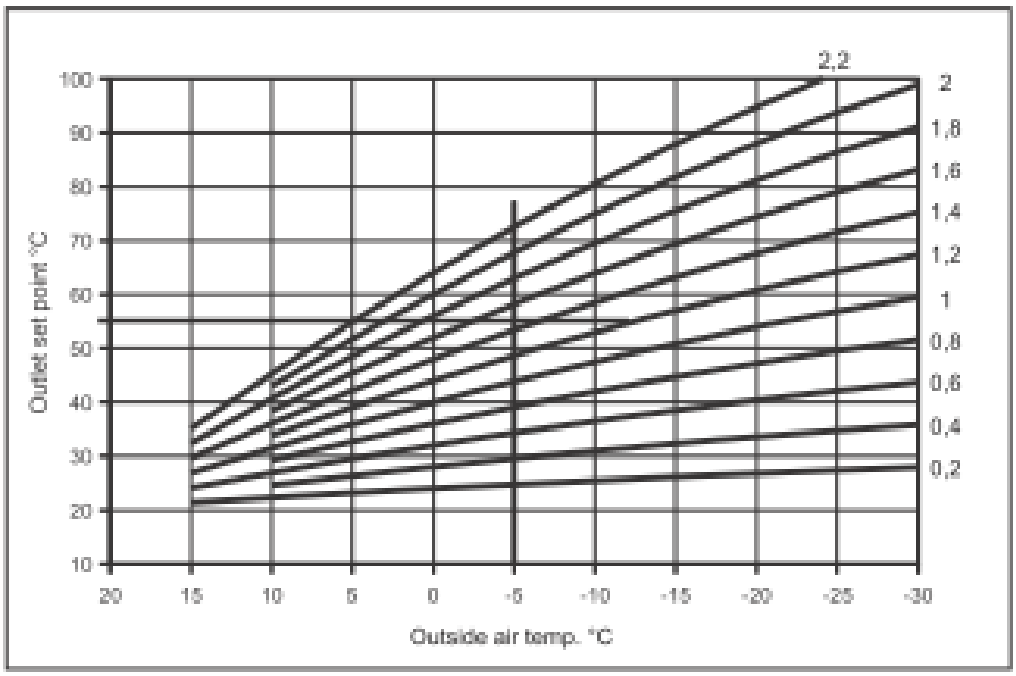

A4. Testing the Heating

First start the heat pump in heating mode only to check the heating.

Using the mode button on the top left of the Nadi room controller press until the sun symbol shows. ☀

Ensure Heat is going to the area/zone.

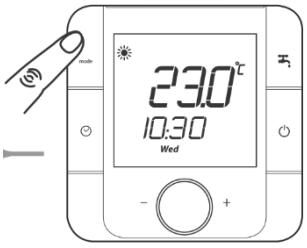

Heating

A5. What you see if the heat pump is trying to provide heating

Before the heat pump runs the compressor to produce heat it first runs it's circulating pump to test the temperature of the water passing through the heat pump. This is known as "sniffing".

When the heat pump is sniffing the pump symbol, ◐, at the bottom of the screen will flash.

This will keep flashing as long as the sniffing is in process. This is defaulted at 3 minutes.

In addition once the water has reached temperature the heat pump will also sniff for a period of 10 minutes (default).

These two parameter settings can be adjusted by the following:

Menu 1, parameter 0147, Sniffing default at 10mins, valve 18 = 180 secs.

Menu 1, parameter 0148, Sniffing cycle, off time between sniffs in minutes, value 10 = 10 minutes

Please note: If the heat pump drops below its set point temperature the unit will start with the heat pump symbol going solid and the compressor symbol flashing. Once the compressor starts the symbol ⊖ goes solid.

B. Underfloor with Aube Thermostat and DHW

The schematic below illustrates the set up for the commissioning steps that follow.

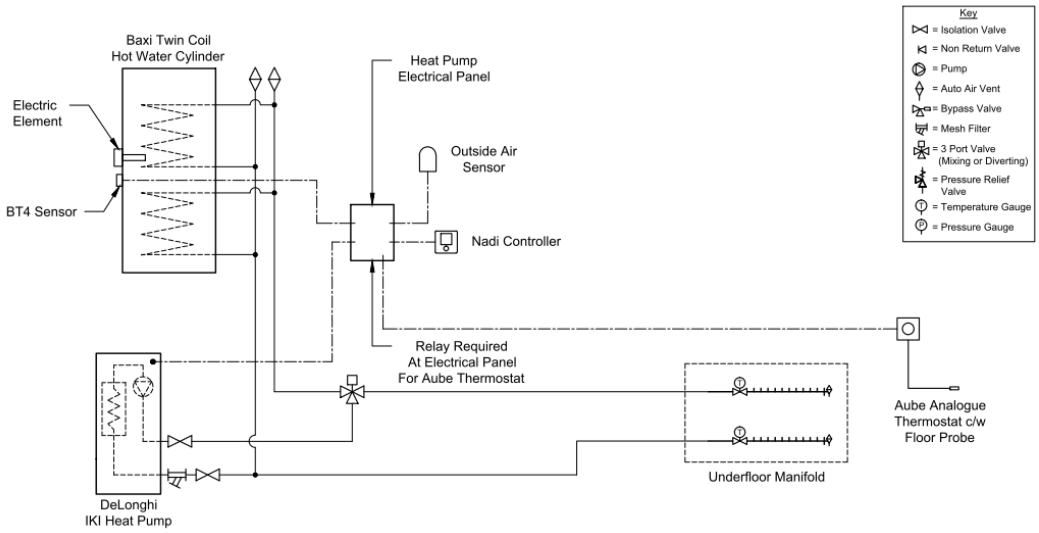

B1. Check all wiring connections

- Ensure BT9 (Buffer Tank Sensor) remains connected and left placed inside the wiring module.
- Check BT1 and BT2 probes are in the correct pockets.
- Ensure BT8, the DHW sensor probe, is located in the hot water cylinder.
- Heating is controlled with the Aube Thermostat. It must be connected to SA3, via a relay. The schematic below shows an Omron Relay and the relevant connections. Should an alternative relay be used please ensure you check the required connections and wire as necessary.
- It is recommended that a flow switch is installed. Should you not install a flow switch then it is necessary to install a bridge between terminals 39 and 40.

i-KI Internal Module Final Wiring layout – Underfloor Layout with Aube Thermostat and DHW

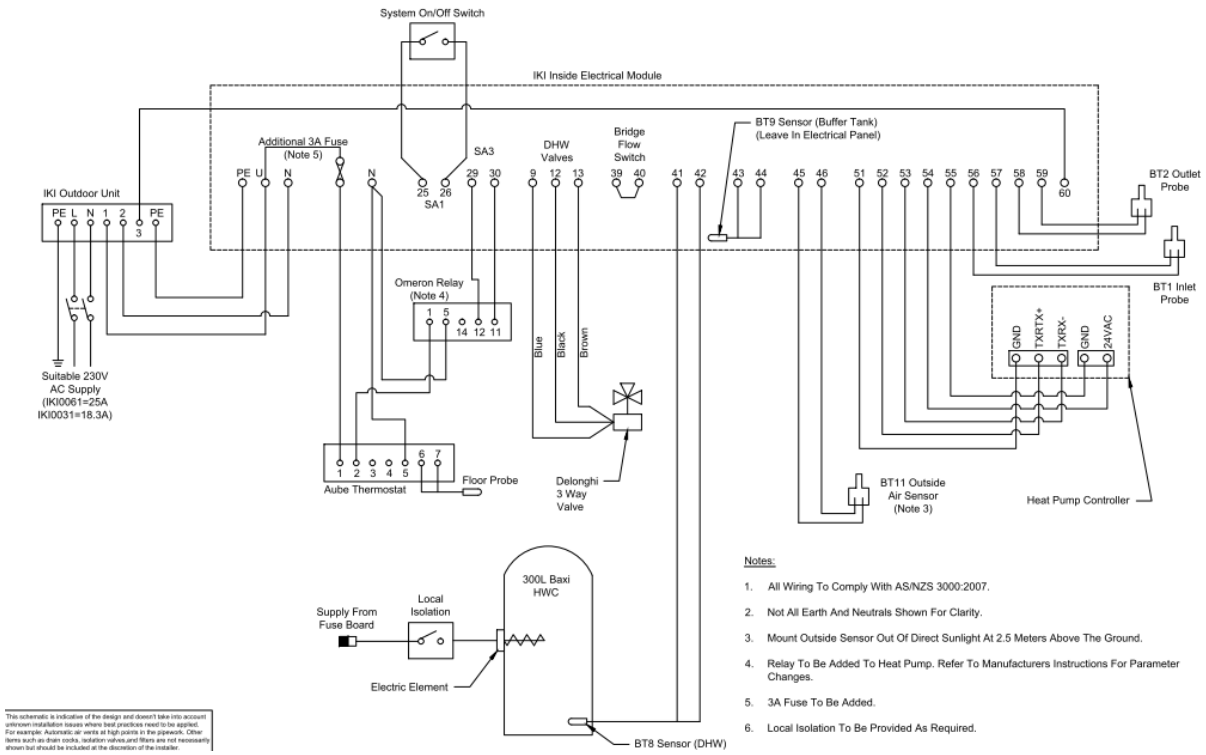

B2. Parameter Settings

Aube Thermostat Control - Ensure the Nadi controller is disabled as a room stat and the Aube Thermostat is activated.

Parameter 11D is factory set to 1. Check to ensure this parameter is set to 1.

Menu 1, and turn the knob anti-clockwise until 11D displays on the screen. If set to 0, change to 1.

B3. Heating Set Point/Weather Compensation.

Determine if the heating will operate from fixed return set point or outside weather compensation.

Return Set Point

- Menu 1, parameter 0152 – ensure this is set at 0.
- Menu 1, parameter 0153 – adjust the set point as required (typically 45 for underfloor heating).

Menu	Parameter no.	Default
Mn01	0152	0

Weather Compensation

- Menu 1, parameter 0152 – change to 1.
- Menu 1, parameter 0159 – set the compensation curve from the graph below.

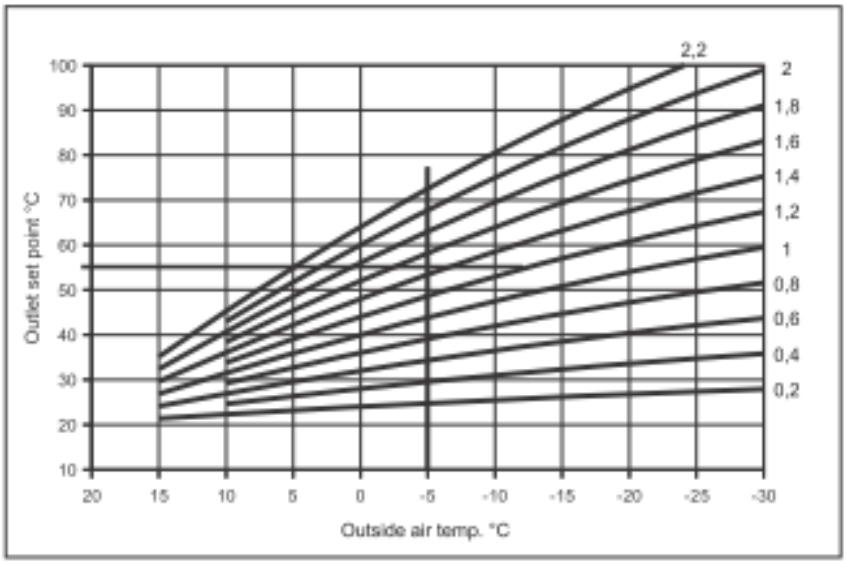

B4 Domestic Hot Water

It is essential that the correct cylinder coil is used. Use a Baxi Twin Coil Cylinder or check with CHNZ if an alternative tank is being used. It is also advised that a temperature set point of 50 °C.

There are 2 set points for DHW, Comfort and Economy. The comfort set point is the required set point that needs to be changed.

We enable the Comfort set point by setting **0015 to 1** and then setting 0023:

Menu 0, parameter 0015 – ensure this is set to 1 (1= comfort, 0= economy)

Menu 0, parameter 0023 – set the comfort set point to 50 °C.

B5. Testing the Heating

First start the heat pump in heating mode only to check the heating.

Using the mode button on the top left of the Nadi room controller press until the sun symbol shows. ☀

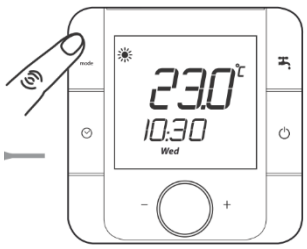

Heating

B6. Test the DHW

To test the DHW, switch on the DHW on the Nadi controller, the symbol should appear.

The 3-way valve should turn to the “open” position.

Valve actuator points to OPEN position when DHW is being heated.

Notch position when being installed: A to left and AB to right. DHW on AB side. Notch is in the heating position as shown above; Rotates 90 degrees to the right when activated to supply DHW.

The heat pump may stop for a while and then resume or it may continue to run. Either way, while the compressor is running, the three way valve will swing over to the open position and start to heat the cylinder. Check for the correct function.

The actual temperature in the hot water cylinder is parameter 0902.

B7. What you see if the heat pump is trying to provide heating

Before the heat pump runs the compressor to produce heat it first runs it’s circulating pump to test the temperature of the water passing through the heat pump. This is known as “sniffing”.

When the heat pump is sniffing the pump symbol, , at the bottom of the screen will flash.

This will keep flashing as long as the sniffing is in process. This is defaulted at 3 minutes.

In addition once the water has reached temperature the heat pump will also sniff for a period of 10 minutes (default).

These two parameter settings can be adjusted by the following:

Menu 1, parameter 0147, Sniffing default at 3mins, valve 18 = 180 secs.

Menu 1, parameter 0148, Sniffing cycle, off time between sniffs in minutes, value 10 = 10 minutes

Please note: If the heat pump drops below its set point temperature the unit will start with the pump symbol going solid and the compressor symbol flashing. Once the compressor starts the symbol goes solid.

C. Underfloor with Buffer Tank, Aube Thermostat and DHW

The schematic below illustrates the set up for the commissioning steps that follow.

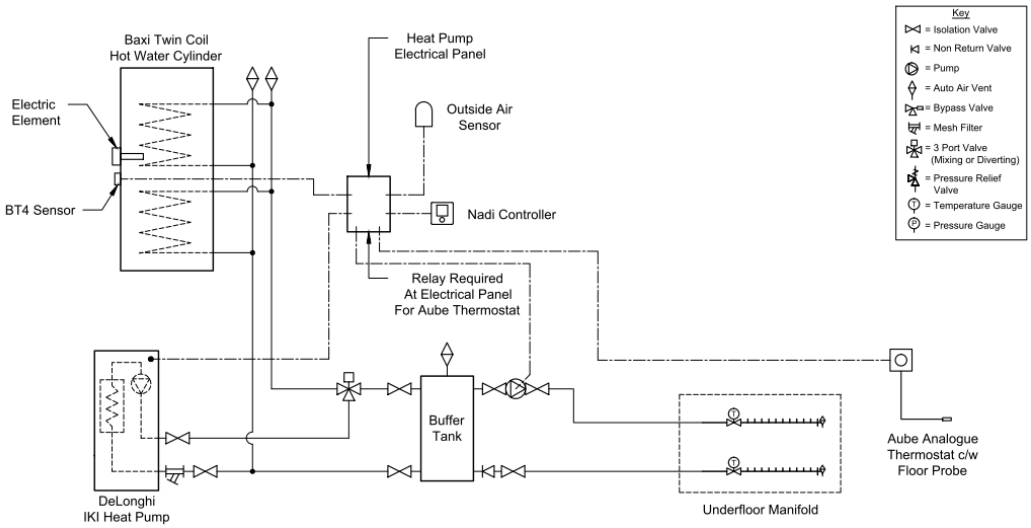

C1. Check all wiring connections

- Check BT1 and BT2 probes are in the correct pockets.
- Ensure BT8, the DHW sensor probe, is located in the hot water cylinder.
- Heating is controlled with the Aube Thermostat. It must be connected to SA3, via a relay. The schematic below shows an Omron Relay and the relevant connections. Should an alternative relay be used please ensure you check the required connections and wire as necessary.
- It is recommended that a flow switch is installed. Should you not install a flow switch then it is necessary to install a bridge between terminals 39 and 40.

i-KI Internal Module Final Wiring layout – Underfloor Layout with Buffer Tank, Aube Thermostat and DHW

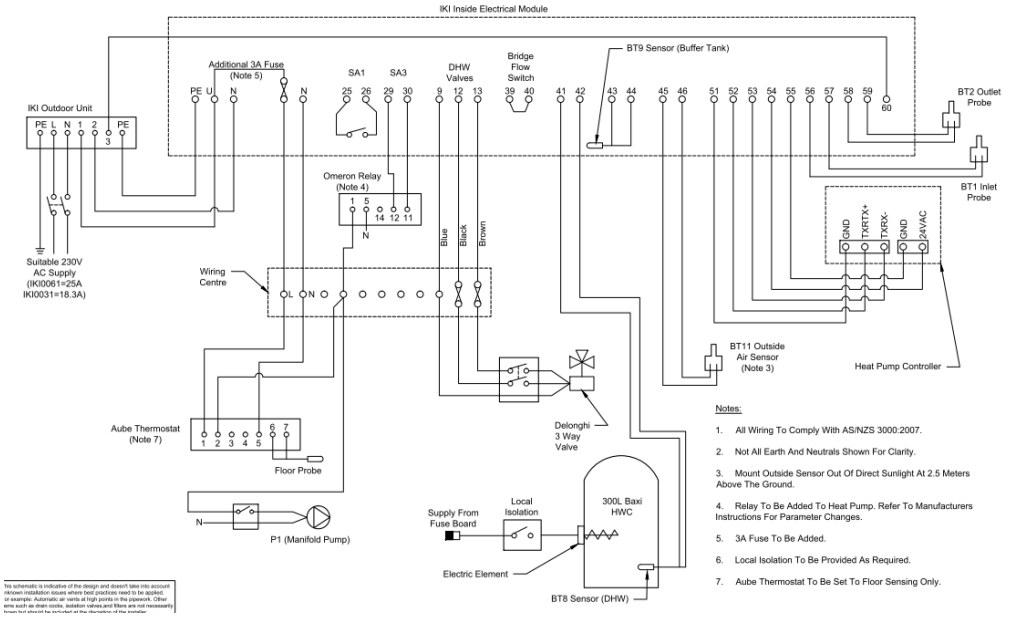

C2. Parameter Settings

Aube Thermostat Control - Ensure the Nadi controller is disabled as a room stat and the Aube Thermostat is activated.

Parameter 11D is factory set to 0. Change this from 0 to 1 to achieve control of the Aube Stat.

Menu 1, and turn the knob anti-clockwise until 11D displays on the screen. Change from 0 to 1.

C3. Heating Set Point/Weather Compensation.

Determine if the heating will operate from fixed return set point or outside weather compensation.

Return Set Point

- Menu 1, parameter 0152 – ensure this is set at 0.
- Menu 1, parameter 0153 – adjust the set point as required (typically 45 for underfloor heating).

Menu	Parameter no.	Default
Mn01	0152	0

Weather Compensation

- Menu 1, parameter 0152 – change to 1.
- Menu 1, parameter 0159 – set the compensation curve from the graph below.

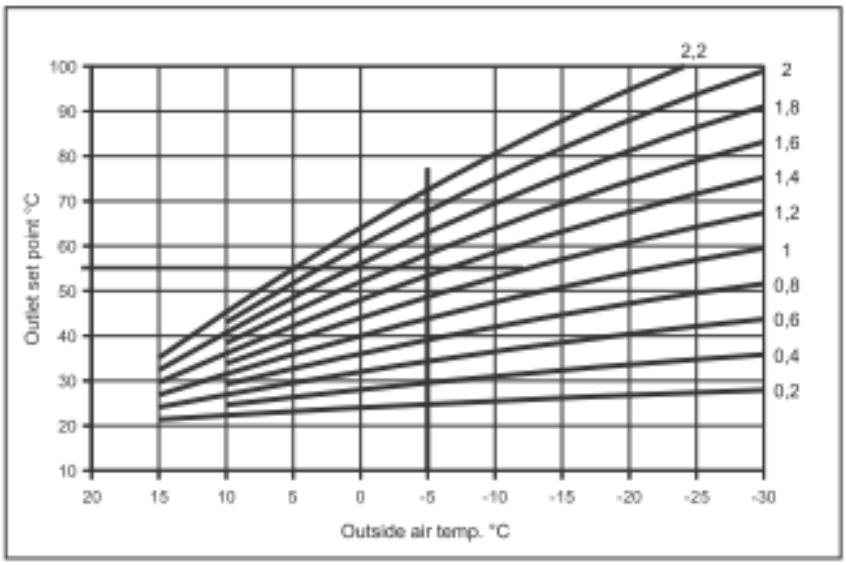

C4 Domestic Hot Water

It is essential that the correct cylinder coil is used. We advise a 3.5m^2 coil to achieve maximum HWC temperatures. It is also advised that a temperature set point of 50 °C.

There are 2 set points for DHW, Comfort and Economy. The comfort set point is the required set point that needs to be changed.

We enable the Comfort set point by setting **0015 to 1** and then setting 0023:

Menu 0, parameter 0015 – ensure this is set to 1 (1= comfort, 0= economy)

Menu 0, parameter 0023 – set the comfort set point to 50 °C.

C5. Testing the Heating

First start the heat pump in heating mode only to check the heating.

Using the mode button on the top left of the Nadi room controller press until the sun symbol shows. ☀

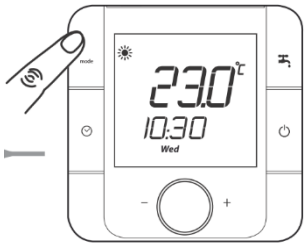

Heating

C6. Test the DHW

To test the DHW, switch on the DHW on the Nadi controller, the symbol should appear.

The 3-way valve should turn to the “open” position.

Valve actuator points to OPEN position when DHW is being heated.

Notch position when being installed: A to left and AB to right. DHW on AB side. Notch is in the heating position as shown above; Rotates 90 degrees to the right when activated to supply DHW

The heat pump may stop for a while and then resume or it may continue to run. Either way, while the compressor is running, the three way valve will swing over to the open position and start to heat the cylinder. Check for the correct function.

The actual temperature in the hot water cylinder is parameter 0902.

C7. What you see if the heat pump is trying to provide heating

Before the heat pump runs the compressor to produce heat it first runs it’s circulating pump to test the temperature of the water passing through the heat pump. This is known as “sniffing”.

When the heat pump is sniffing the pump symbol, ◐, at the bottom of the screen will flash.

This will keep flashing as long as the sniffing is in process. This is defaulted at 3 minutes.

In addition once the water has reached temperature the heat pump will also sniff for a period of 10 minutes (default).

These two parameter settings can be adjusted by the following:

Menu 1, parameter 0147, Sniffing default at 3mins, valve 18 = 180 secs.

Menu 1, parameter 0148, Sniffing cycle, off time between sniffs in minutes, value 10 = 10 minutes

Please note: If the heat pump drops below its set point temperature the unit will start with the pump symbol going solid and the compressor symbol flashing. Once the compressor starts the symbol goes solid.

D. Underfloor controlled with Nadi Controller (Or Radiators)

Central Heating New Zealand recommend a Aube Thermostat is used to control underfloor heating. Should the Nadi Controller be used to control the underfloor then the following steps highlight the various parameters that need to be adjusted and checked.

D1. Check all wiring connections

- Ensure BT8 (DHW Sensor) and BT9 (Buffer Tank Sensor) remain connected and left placed inside the wiring module.
- Check BT1 and BT2 probes are in the correct pockets.
- Heating is controlled using the Nadi Controller. SA1 is supplied with a loop. This must be left in placed to control the heating.
- It is recommended that a flow switch is installed. Should you not install a flow switch then it is necessary to install a bridge between terminals 39 and 40.

D2. Parameter Settings

Check to ensure the Nadi Controller is set up as the room thermostat.

Parameter 11D is factory set to 1. Check to ensure the parameter is set at 0.

D3. Heating Set Point/Weather Compensation.

Determine if the heating will operate from fixed return set point or outside weather compensation.

<u>Return Set Point</u>

- Menu 1, parameter 0152 – ensure this is set at 0.
- Menu 1, parameter 0153 – adjust the set point as required (typically 45 for underfloor heating).

Menu	Parameter no.	Default
Mn01	0152	0

This parameter is defaulted to 55. The setting needs to be set in accordance with the floor covering.

<u>Weather Compensation</u>

- Menu 1, parameter 0152 – change to 1.
- Menu 1, parameter 0159 – set the compensation curve from the graph below.

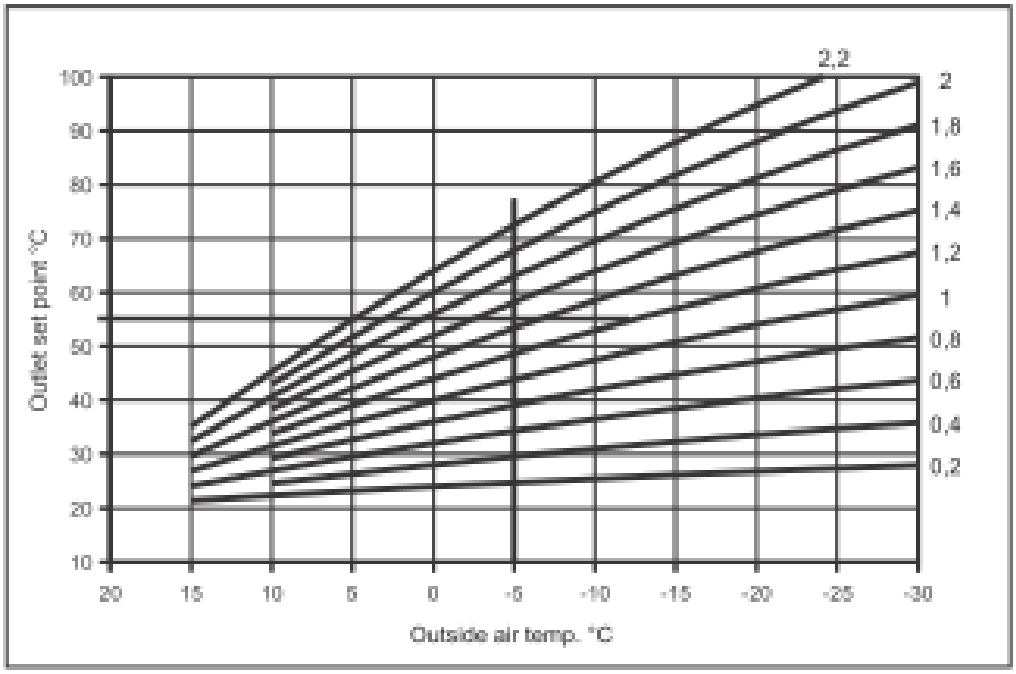

D4. Testing the Heating

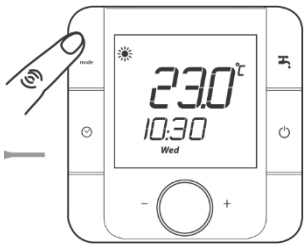

Heating

First start the heat pump in heating mode only to check the heating.

Using the mode button on the top left of the Nadi room controller press until the sun symbol shows. ☀

Ensure Heat is going to the area/zone.

D5. What you see if the heat pump is trying to provide heating

Before the heat pump runs the compressor to produce heat it first runs it's circulating pump to test the temperature of the water passing through the heat pump. This is known as "sniffing".

When the heat pump is sniffing the pump symbol, ◔, at the bottom of the screen will flash.

This will keep flashing as long as the sniffing is in process. This is defaulted at 3 minutes.

In addition once the water has reached temperature the heat pump will also sniff for a period of 10 minutes (default).

These two parameter settings can be adjusted by the following:

Menu 1, parameter 0147, Sniffing default at 10mins, valve 18 = 180 secs.

Menu 1, parameter 0148, Sniffing cycle, off time between sniffs in minutes, value 10 = 10 minutes

Please note: If the heat pump drops below its set point temperature the unit will start with the pump symbol going solid and the compressor symbol flashing. Once the compressor starts the symbol ⊖ goes solid.

Final Notes

Complete commissioning

Add Fernox to the system and top up the pressure to 2 bar.

Clean the filter on the heat pump to remove any debris flushed through during commissioning.

Leave the heating on to demonstrate that it works.

How to check sensor temperatures

Go to menu 09 following instructions above which shows what the temperature sensors are reading

0900 = return temperature

0901 = flow temperature

0902 = DHW sensor temperature

0904 = Storage tank (buffer tank) temperature.

(The buffer tank sensor is not normally used with a buffer tank unless it is a system with another heat source as a boost. However the heat pump comes with this probe already connected and it should be left connected otherwise an alarm will always come up preventing the heat pump from running.)

Troubleshooting

Please refer to our Heat Pump Troubleshooting Sheet below