WATTS®

# INSTALLATION MANUAL

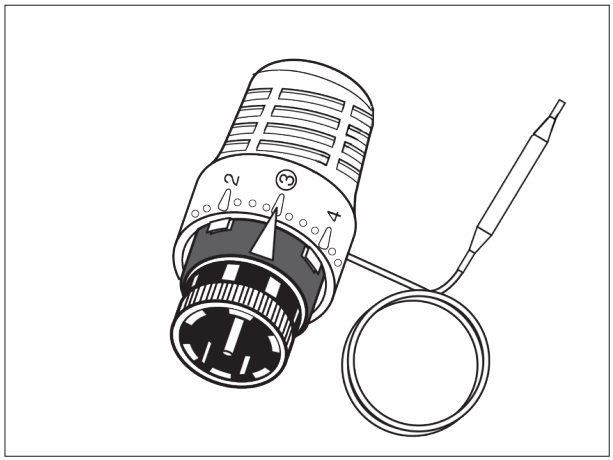


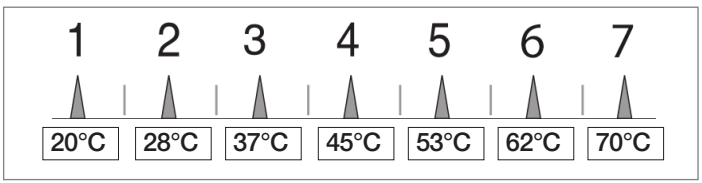


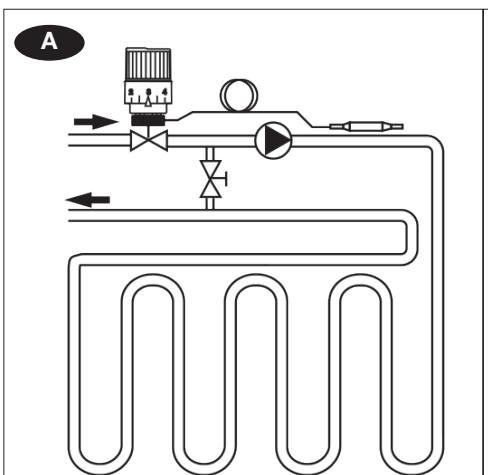


Fig.1

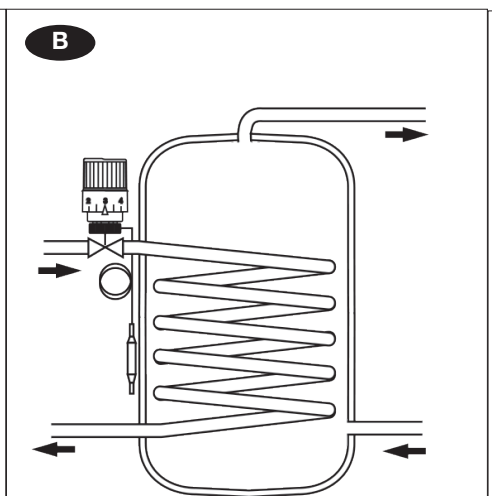


Fig.2

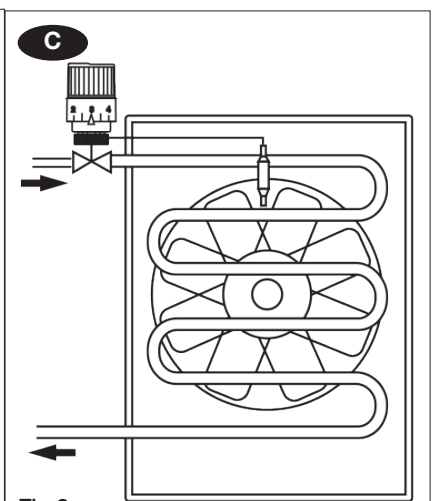


Fig.3