Data Sheet

Thermostatic Sensors Type RAE

Application

RAE 5054/5154

RAE 5056

RAE is a self-actuating proportional controller with a small P-band.
The series includes:

- RAE 5054 with built-in temperature sensor.
- RAE 5056 with remote sensor.
- RAE 5154 with built-in sensor and positive shut-off feature

RAE Radiator thermostats are designed for use in 2-pipe domestic heating systems.

RAE sensors incorporate a frost protection setting and max/min limitation of the temperature setpoint.

RAE sensors are equipped with a snap-lock mechanism which ensures quick, firm and long lasting mounting of the sensor to the valve body, without the use of tools.

RAE 5056 is equipped with 2 m of ultra-thin capillary tube, which is coiled up within the remote sensor housing. After sensor mounting capillary tube is pulled out to the required length.

The RAE construction is particularly robust, with both End-Stop strength limits and sensor bending force limits being substantially above the requirements of the European Standard EN 215.

Approved to EN 215

027

Thermostatic sensors RAE are manufactured to the highest standards, and are approved to the European standard EN 215.

All Danfoss radiator thermostats are manufactured in factories, assessed and certified by BSI (British Standard Institution) against ISO 9000 and ISO 14001.

Data and Ordering

Type	Version	Setting range [1]	Code no.
RAE 5054	Built-in sensor	8-28 °C	**013G5054**
RAE 5056	Remote sensor, 0-2 m [2]		**013G5056**
RAE 5154	Built-in sensor, positive shut-off feature		**013G5154**

[1] *Temperatures stated for Xp = 2K, i.e. the valve is closed at 2 °C higher room temperature.*
[2] *The remote sensor is delivered with all of the capillary tube coiled up within the sensor. When mounting the sensor, only the capillary tube required is uncoiled.*

Accessories

Accessories and spare parts	Code no.
Angle adaptor for snap-lock sensors, for valves with Danfoss RA connection	**013G1350**
Angle adaptor for snap-lock sensors, for valves with M30x1.5 connection	**013G1360**
Anti-theft plugs (20 pcs.)	**013G5245**
Tool kit comprising Allen key & locking pin tool	**013G1236**
Manual setting knob for all RA valves (differential pressure max. 0.6 bar)	**013G5002**

Design

The RAE thermostatic sensor operates with a liquid filled bellows system, which is actuated by ambient temperature changes.
The calibrated pressure in the bellows corresponds to the temperature. This pressure is balanced by the force of a regulating spring.

On a rise in ambient temperature, the pressure increases in the bellows, moving the valve cone towards the "closed" position, until equilibrium exists between the bellows and spring.

On a drop inambient temperature, the pressure falls, allowing the bellows to contract and the valve cone to move towards the "open" position until a state of equilibrium is re-established.

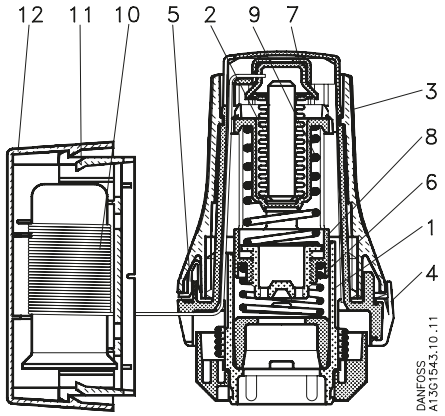

1. *Socket*
2. *Bellows*
3. *Setting handle*
4. *Setting mark*
5. *Limiter tab*
6. *Reset spring*
7. *Sensor medium*
8. *Spindle*
9. *Spring*
10. *Capillar tube*
11. *Console*
12. *Cover*

Limiting and Locking the Settings

Locking and limitation of the temperature setpoint of RAE sensors are carried out using the limiter tabs as shown below.

Example: Limiting max. setting to 4.
- Turn sensor left to max.
- Press and hold the right tab with a screwdriver while turning handle to 4.
- Remove the screwdriver.

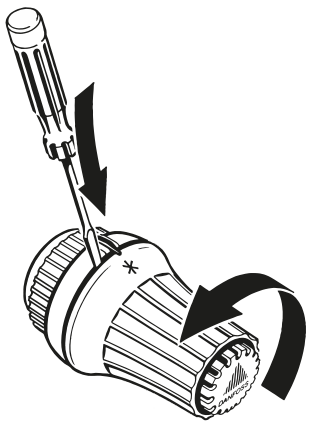

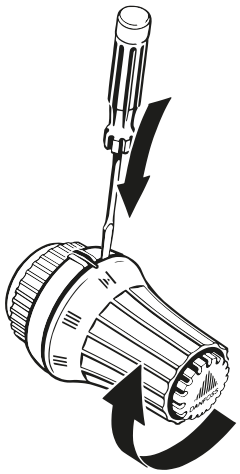

Setting the Temperature

The required room temperature is set by turning the setting dial. The temperature scales show the correlation between scale values and the room temperature. The temperature values stated are for guidance only as the obtained room temperature will often be influenced by installation conditions.

The temperature scales are stated according to European standards at Xp = 2°C. This means that the radiator thermostats close at a sensor temperature which is 2°C higher than stated on the temperature scales.

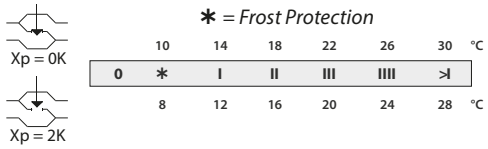

Mounting

The Danfoss snap-on coupling is easy to mount and requires no use of tools, once the valve cover has been removed. Just place the sensor on the valve and press firmly.

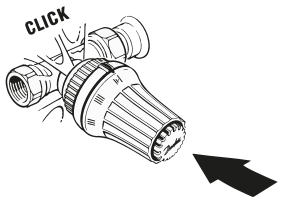

Place and press firmly

When the sensor is in place, the snap-on mechanism is activated and the sensor is mounted correctly.
Tighten the coupling by turning the snap-on ring clockwise.

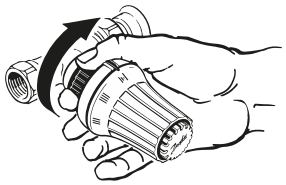

Tightening the snap-on coupling

The sensor is removed by turning the snap-on ring counter-clockwise.
Before remounting he snap-on mechanism must be activated manually by turning the snap-on ring counter-clockwise.

Note!
Mounting instructions are found on the sensor package.

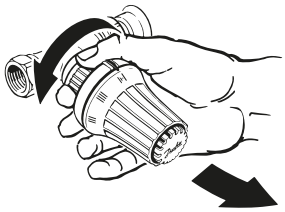

Removing the sensor

Theft Protection

After mounting the RAE sensor, insert an anti-theft plug and press.

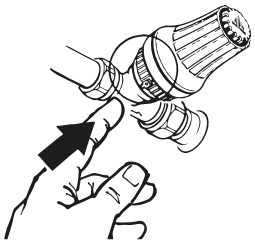

Removing an anti-theft plug:

1. Screw the locking pin tool in the plug.
2. Pull the plug out.
3. Unscrew the locking pin tool.

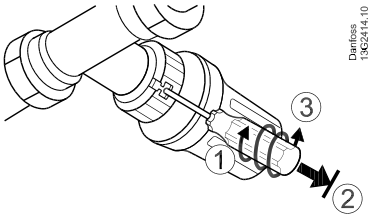

Dimensions

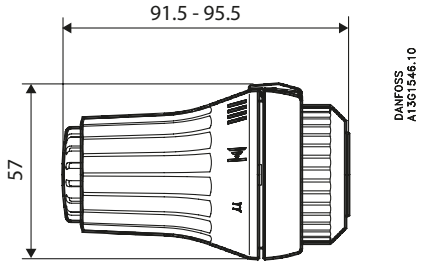

Sensor type RAE 5054/5154

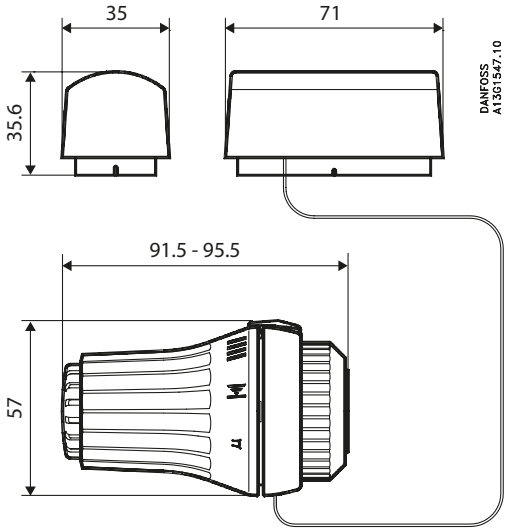

Sensor type RAE 5056

Danfoss can accept no responsibility for possible errors in catalogues, brochures and other printed material. Danfoss reserves the right to alter its products without notice. This also applies to products already on order provided that such alterations can be made without subsequential changes being necessary in specifications already agreed.
All trademarks in this material are property of the respective companies. Danfoss and the Danfoss logotype are trademarks of Danfoss A/S. All rights reserved.